VERSA-LINE

Submittal

JVB-PM 2PM
Versa-Line Pedestal
Copper/Aluminum and
Steel Element Ratings

☐ **JVB Slip Jointed Enclosure**

Specification

ENCLOSURE:

STYLE: Pedestal Mounted, Top Outlet
OUTLET: Stamped Louvers
Pencil Proof

LENGTHS: 2'0" thru 8'0" in 6" Increments
MAT'L: ☐ 16 Ga. CRS (Std)
☐ 14 Ga. CRS (Opt'l)
☐ 16 Ga. Stainless Steel (Opt'l)
☐ 14 Ga. Stainless Steel (Opt'l)
☐ 14 Ga. Aluminum (Opt'l)
☐ 12 Ga. Aluminum (Opt'l)
FINISH: ☐ Baked Powder (Std)
☐ Baked Metallic (Opt'l)

ACCESSORIES:

☐ JV Overlapping Type

ELEMENT:

TYPE: ☐ Cu/AL (Mechanically Expanded)
LENGTHS: 2'0" thru 12'6" in 1" Increments for 1" & 1-1/4" Cu.
2'0" thru 8'0" in 1" Increments for 3/4" Cu.

One End Flared (Std)

TYPE: ☐ IPS Steel (Mechanically Expanded)
LENGTHS: 2'0" thru 12'6" in 1" Increments
☐ Thread both Ends (Std)
☐ Beveled Ends for Field Weld (Opt'l)

See Catalog for Working Pressures

BRACKETS:

☐ Pedestal Brkt w/ B.B. Floor Mounted

DAMPER: Not Available

☐ JVB-PM

ELEMENT TUBE SIZE	FIN SIZE HEIGHT x WIDTH	CRADLE NUMBER	A
3/4 COPPER	3 5/8 x 4 1/4	2	6 7/16
3/4 COPPER	4 1/4 x 4 1/4	3A	6 13/16
1" COPPER	3 5/8 x 4 1/4	2	6 5/8
1" COPPER	4 1/4 x 4 1/4	2	6 5/8
1 1/4 COPPER	3 5/8 x 4 1/4	2	6 3/4
1 1/4 COPPER	4 1/4 x 4 1/4	2	6 3/4
1" STEEL	4 1/4 x 4 1/4	2	6 3/4
1 1/4 STEEL	4 1/4 x 4 1/4	2	6 15/16
2" STEEL	4 1/4 x 4 1/4	1	6 11/16

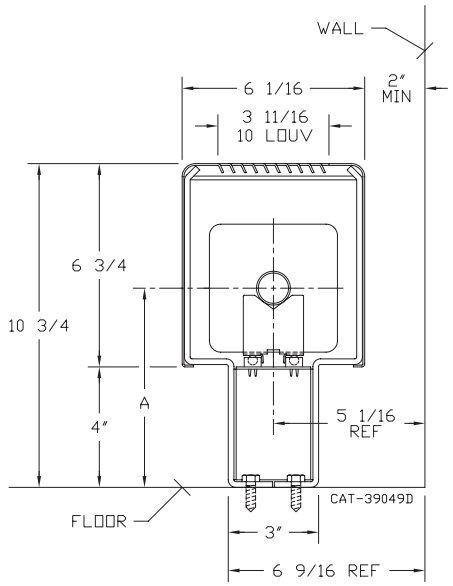

☐ JVB-2PM

ELEMENT TUBE SIZE	FIN SIZE HEIGHT x WIDTH	CRADLE NUMBER	A
3/4 COPPER	3 5/8 x 4 1/4	2	6 7/16
3/4 COPPER	4 1/4 x 4 1/4	3A	6 13/16
1" COPPER	3 5/8 x 4 1/4	2	6 5/8
1" COPPER	4 1/4 x 4 1/4	2	6 5/8
1 1/4 COPPER	3 5/8 x 4 1/4	2	6 3/4
1 1/4 COPPER	4 1/4 x 4 1/4	2	6 3/4
1" STEEL	4 1/4 x 4 1/4	2	6 3/4
1 1/4 STEEL	4 1/4 x 4 1/4	2	6 15/16
2" STEEL	4 1/4 x 4 1/4	1	6 11/16

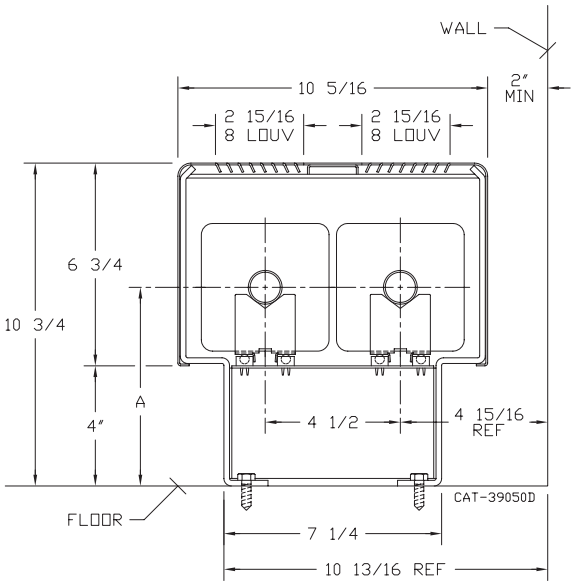

STERLING®
COMMERCIAL HYDRONIC PRODUCTS
260 North Elm St., Westfield, MA 01085
(413) 564-5535 Fax: (413) 562-8437
www.sterlingheat.com

MADE IN THE USA

10/22

PROJECT: _____ **DATE:** _____
LOCATION: _____
ARCHITECT: _____
ENGINEER: _____
CONTRACTOR: _____
PO NUMBER: _____

STYLE "JVB-PM 2PM" VERSA-LINE PEDESTAL

COPPER/ALUMINUM ELEMENTS

ALL RATINGS ARE IN BTU/HR/LIN FT AND BASED ON 3 FPS VELOCITY, 65° EAT

TUBE SIZE	CATALOG DESIGNATION	FIN SIZE HEIGHT X WIDTH	FINS PER FT.	FIN THICKNESS IN INCHES	ENCL DEPTH IN INCHES	ROWS AND CENTERS IN INCHES	MOUNTING HEIGHT IN INCHES	STEAM 215° FACTOR	HOT WATER (AVG.) 200°	190°	180°	170°	160°	150°	140°	130°	120°
									CORRECTION FACTORS FOR AVERAGE WATER TEMPERATURES								
								1.00	0.86	0.78	0.69	0.61	0.53	0.45	.40	.33	.26
3/4"	C3/4-433	3-5/8" x 4-1/4"	32	.020	6 3/4	1	10 3/4	1040	890	810	720	630	550	470	420	340	270
					10 5/16	2 - 4 1/2	"	2080	1790	1620	1440	1270	1100	940	830	690	540
3/4"	C3/4-434	3-5/8" x 4-1/4"	40	.020	6 3/4	1	10 3/4	1250	1080	980	860	760	660	560	500	410	330
					10 5/16	2 - 4 1/2	"	2490	2140	1940	1720	1520	1320	1120	1000	820	650
3/4"	C3/4-435	3-5/8" x 4-1/4"	50	.020	6 3/4	1	10 3/4	1380	1190	1080	950	840	730	620	550	460	360
					10 5/16	2 - 4 1/2	"	2750	2370	2150	1900	1680	1460	1240	1100	910	720
1"	C433	3-5/8" x 4-1/4"	32	.020	6 3/4	1	10 3/4	1080	930	840	750	660	570	490	430	360	280
					10 5/16	2 - 4 1/2	"	2170	1870	1690	1500	1320	1150	980	870	720	560
1"	C434	3-5/8" x 4-1/4"	40	.020	6 3/4	1	10 3/4	1210	1040	940	830	740	640	540	480	400	310
					10 5/16	2 - 4 1/2	"	2430	2090	1900	1680	1480	1290	1090	970	800	630
1"	C435	3-5/8" x 4-1/4"	50	.020	6 3/4	1	10 3/4	1380	1190	1080	950	840	730	620	550	460	360
					10 5/16	2 - 4 1/2	"	2750	2370	2150	1900	1680	1460	1240	1100	910	720
1-1/4"	C1433	3-5/8" x 4-1/4"	32	.020	6 3/4	1	10 3/4	1130	970	880	780	690	600	510	450	370	290
					10 5/16	2 - 4 1/2	"	2250	1940	1760	1550	1370	1190	1010	900	740	590
1-1/4"	C1434	3-5/8" x 4-1/4"	40	.020	6 3/4	1	10 3/4	1240	1070	970	860	760	660	560	500	410	320
					10 5/16	2 - 4 1/2	"	2480	2130	1930	1710	1510	1310	1120	990	820	640
1-1/4"	C1435	3-5/8" x 4-1/4"	50	.020	6 3/4	1	10 3/4	1380	1190	1080	950	840	730	620	550	460	360
					10 5/16	2 - 4 1/2	"	2750	2370	2150	1900	1680	1460	1240	1100	910	720
3/4"	C3/4-43	4-1/4" SQ.	32	.020	6 3/4	1	10 3/4	1150	990	900	790	700	610	520	460	380	300
					10 5/16	2 - 4 1/2	"	2300	1980	1790	1590	1400	1220	1040	920	760	600
3/4"	C3/4-44	4-1/4" SQ.	40	.020	6 3/4	1	10 3/4	1380	1190	1080	950	840	730	620	550	460	360
					10 5/16	2 - 4 1/2	"	2750	2370	2150	1900	1680	1460	1240	1100	910	720
3/4"	C3/4-45	4-1/4" SQ.	50	.020	6 3/4	1	10 3/4	1420	1220	1110	980	870	750	640	570	470	370
					10 5/16	2 - 4 1/2	"	2840	2440	2220	1960	1730	1510	1280	1140	940	740
1"	C43	4-1/4" SQ.	32	.020	6 3/4	1	10 3/4	1150	990	900	790	700	610	520	460	380	300
					10 5/16	2 - 4 1/2	"	2300	1980	1790	1590	1400	1220	1040	920	760	600
1"	C44	4-1/4" SQ.	40	.020	6 3/4	1	10 3/4	1280	1100	1000	880	780	680	580	510	420	330
					10 5/16	2 - 4 1/2	"	2560	2200	2000	1770	1560	1360	1150	1020	840	670
1"	C45	4-1/4" SQ.	50	.020	6 3/4	1	10 3/4	1440	1240	1120	990	880	760	650	580	480	370
					10 5/16	2 - 4 1/2	"	2890	2490	2250	1990	1760	1530	1300	1160	950	750
1-1/4"	C143	4-1/4" SQ.	32	.020	6 3/4	1	10 3/4	1200	1030	940	830	730	640	540	480	400	310
					10 5/16	2 - 4 1/2	"	2410	2070	1880	1660	1470	1280	1080	960	800	630
1-1/4"	C144	4-1/4" SQ.	40	.020	6 3/4	1	10 3/4	1430	1230	1120	990	870	760	640	570	470	370
					10 5/16	2 - 4 1/2	"	2860	2460	2230	1970	1740	1520	1290	1140	940	740
1-1/4"	C145	4-1/4" SQ.	50	.020	6 3/4	1	10 3/4	1470	1260	1150	1010	900	780	660	590	490	380
					10 5/16	2 - 4 1/2	"	2940	2530	2290	2030	1790	1560	1320	1180	970	760

Note: Copper tube furnished flared one end standard.

STEEL ELEMENTS

ALL RATINGS ARE IN BTU/HR/LIN FT AND BASED ON 3 FPS VELOCITY, 65° EAT

TUBE SIZE	CATALOG DESIGNATION	FIN SIZE HEIGHT X WIDTH	FINS PER FT.	FIN THICKNESS IN INCHES	ENCL DEPTH IN INCHES	ROWS AND CENTERS IN INCHES	MOUNTING HEIGHT IN INCHES	STEAM 215° FACTOR	HOT WATER (AVG.) 200°	190°	180°	170°	160°	150°	140°	130°	120°
									CORRECTION FACTORS FOR AVERAGE WATER TEMPERATURES								
								1.00	0.86	0.78	0.69	0.61	0.53	0.45	.40	.33	.26
1"	S43	4-1/4" SQ.	32	.032	6 3/4	1	10 3/4	1140	980	890	790	700	600	510	460	380	300
					10 5/16	2 - 4 1/2	"	2270	1950	1770	1570	1380	1200	1020	910	750	590
1"	S44	4-1/4" SQ.	40	.032	6 3/4	1	10 3/4	1280	1100	1000	880	780	680	580	510	420	330
					10 5/16	2 - 4 1/2	"	2560	2200	2000	1770	1560	1360	1150	1020	840	670
1"	S45	4-1/4" SQ.	50	.032	6 3/4	1	10 3/4	1360	1170	1060	940	830	720	610	540	450	350
					10 5/16	2 - 4 1/2	"	2720	2340	2120	1880	1660	1440	1220	1090	900	710
1-1/4"	S143	4-1/4" SQ.	32	.032	6 3/4	1	10 3/4	1050	900	820	720	640	560	470	420	350	270
					10 5/16	2 - 4 1/2	"	2100	1810	1640	1450	1280	1110	950	840	690	550
1-1/4"	S144	4-1/4" SQ.	40	.032	6 3/4	1	10 3/4	1270	1090	990	880	770	670	570	510	420	330
					10 5/16	2 - 4 1/2	"	2550	2190	1990	1760	1560	1350	1150	1020	840	660
1-1/4"	S145	4-1/4" SQ.	50	.032	6 3/4	1	10 3/4	1330	1140	1040	920	810	700	600	530	440	350
					10 5/16	2 - 4 1/2	"	2670	2300	2080	1840	1630	1420	1200	1070	880	690
2"	S242	4-1/4" SQ.	25	.032	6 3/4	1	10 3/4	980	840	760	680	600	520	440	390	320	250
					10 5/16	2 - 4 1/2	"	1960	1690	1530	1350	1200	1040	880	780	650	510
2"	S243	4-1/4" SQ.	32	.032	6 3/4	1	10 3/4	1140	980	890	790	700	600	510	460	380	300
					10 5/16	2 - 4 1/2	"	2270	1950	1770	1570	1380	1200	1020	910	750	590

Notes: 1) Steel fins furnished as .032 thick, painted black.
2) NPT threads furnished on steel elements. Please use domestic fittings for proper installation.
3) Ratings based on typical window wall installation.
4) The ends can be provided chamfered for field welded fittings when specified.

STYLE "JVB-PM 2PM" VERSA-LINE PEDESTAL

ALTERNATE PIPING CAPABILITY WITH 3/4" AND 1" COPPER TUBE ELEMENTS

☐ JVB-PM WITH RETURN ABOVE ELEMENT

ELEMENT TUBE SIZE	FIN SIZE HEIGHT x WIDTH	CRADLE NUMBER	A	B WITH 3/4 RETURN
3/4 COPPER	3 5/8 x 4 1/4	2	6 7/16	2 3/8
3/4 COPPER	4 1/4 x 4 1/4	3A	6 13/16	2 11/16
1" COPPER	3 5/8 x 4 1/4	2	6 5/8	2 1/2
1" COPPER	4 1/4 x 4 1/4	2	6 5/8	2 7/8

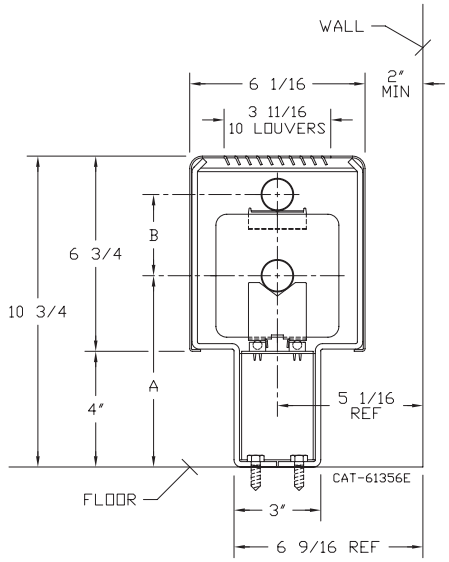

☐ JVB-PM WITH RETURN BELOW ELEMENT

ELEMENT TUBE SIZE	FIN SIZE HEIGHT x WIDTH	CRADLE NUMBER	A	B WITH 3/4 RETURN	B WITH 1" RETURN
3/4 COPPER	3 5/8 x 4 1/4	6	7 3/16	2 1/2	2 3/8
3/4 COPPER	4 1/4 x 4 1/4	10	7 3/8	2 11/16	N/A
1" COPPER	3 5/8 x 4 1/4	6	7 3/8	2 11/16	2 9/16
1" COPPER	4 1/4 x 4 1/4	10	7 9/16	2 7/8	2 3/4

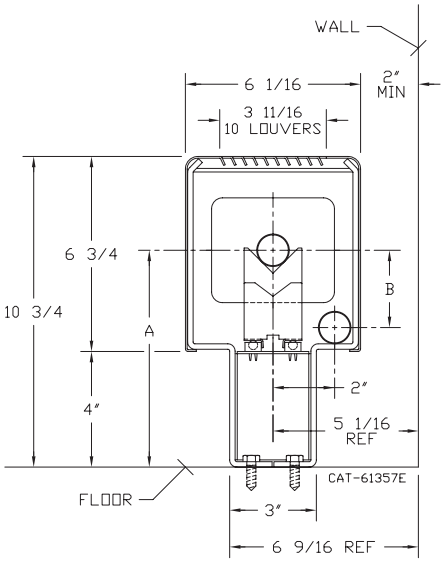

ADJUSTABLE BRACKET FOR STEAM APPLICATIONS

ELEMENT TUBE SIZE	FIN SIZE HEIGHT x WIDTH	CRADLE NUMBER	A MIN	A MAX
3/4 COPPER	3 5/8 x 4 1/4	2	6 1/2	8"
3/4 COPPER	4 1/4 x 4 1/4	3A	6 11/16	
1" COPPER	3 5/8 x 4 1/4	2	6 1/2	
1" COPPER	4 1/4 x 4 1/4	2		
1 1/4 COPPER	3 5/8 x 4 1/4	2	6 5/8	
1 1/4 COPPER	4 1/4 x 4 1/4	2		
1" STEEL	4 1/4 x 4 1/4	2	6 5/8	
1 1/4 STEEL	4 1/4 x 4 1/4	2	6 3/4	
2" STEEL	4 1/4 x 4 1/4	1	6 1/2	

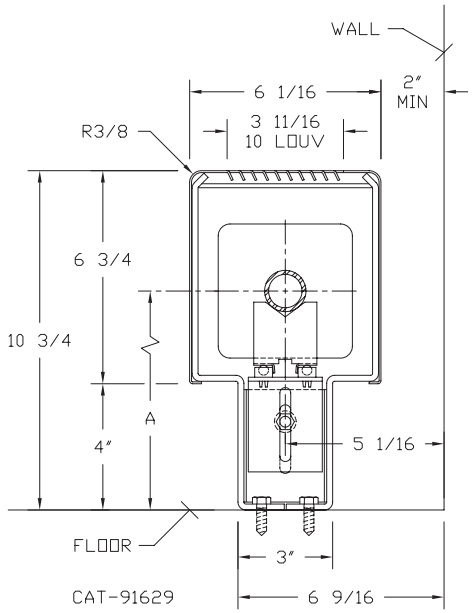

ELEMENT TUBE SIZE	FIN SIZE HEIGHT x WIDTH	CRADLE NUMBER	A MIN	A MAX
3/4 COPPER	3 5/8 x 4 1/4	2	6 1/2	8"
3/4 COPPER	4 1/4 x 4 1/4	3A	6 11/16	
1" COPPER	3 5/8 x 4 1/4	2	6 1/2	
1" COPPER	4 1/4 x 4 1/4	2		
1 1/4 COPPER	3 5/8 x 4 1/4	2	6 5/8	
1 1/4 COPPER	4 1/4 x 4 1/4	2		
1" STEEL	4 1/4 x 4 1/4	2	6 5/8	
1 1/4 STEEL	4 1/4 x 4 1/4	2	6 3/4	
2" STEEL	4 1/4 x 4 1/4	1	6 1/2	

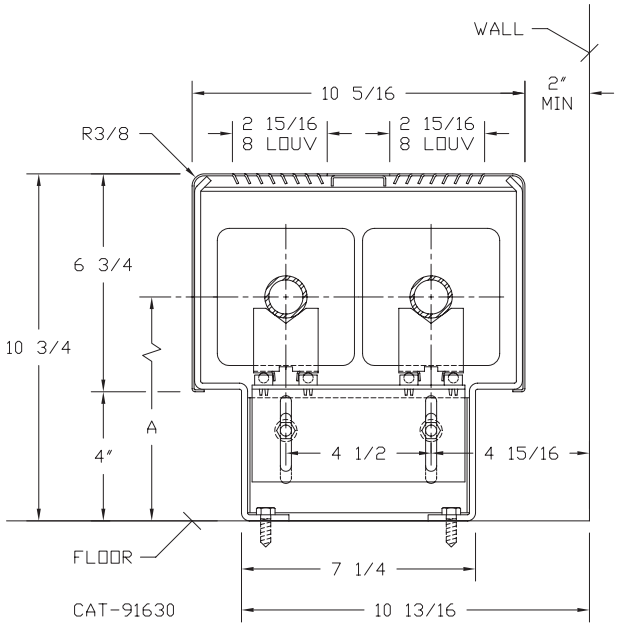

Design Data

COMMERCIAL FINNED TUBE CHARTS FOR RATING CORRECTIONS

For assistance with ratings and selection, please use our online Specifier.

CORRECTION FACTORS FOR WATER TEMPERATURES AND AIR TEMPERATURES OTHER THAN STANDARD

AVERAGE WATER TEMP. °F	ENTERING AIR TEMPERATURE °F														
	45	55	STD 65	70	75	80	85	90	95	100	110	120	130	140	150
90	.19	.13	.11	.06											
100	.25	.19	.15	.11	.08	.06									
110	.31	.25	.20	.16	.13	.11	.08	.06							
120	.38	.31	.26	.21	.19	.16	.13	.11	.08	.06					
130	.45	.38	.33	.28	.25	.21	.19	.16	.13	.11	.06				
140	.53	.45	.40	.34	.31	.28	.25	.21	.19	.16	.11	.06			
150	.61	.53	.45	.41	.38	.34	.31	.28	.25	.21	.16	.11	.06		
160	.69	.61	.53	.49	.45	.41	.38	.34	.31	.28	.21	.16	.11	.06	
170	.77	.69	.61	.57	.53	.49	.45	.41	.38	.34	.28	.21	.16	.11	.06
180	.86	.77	.69	.65	.61	.57	.53	.49	.45	.41	.34	.28	.21	.16	.11
190	.95	.86	.78	.73	.69	.65	.61	.57	.53	.49	.41	.34	.28	.21	.16
200	1.05	.95	.86	.82	.77	.73	.69	.65	.61	.57	.49	.41	.34	.28	.21
210	1.14	1.05	.95	.91	.86	.82	.77	.73	.69	.65	.57	.49	.41	.34	.28
▶ 215 (STD.)	1.19	1.09	1.00	.95	.91	.86	.82	.77	.73	.69	.61	.53	.45	.38	.31
220	1.24	1.14	1.05	1.00	.95	.91	.86	.82	.77	.73	.65	.57	.49	.41	.34
230	1.34	1.24	1.14	1.09	1.05	1.00	.95	.91	.86	.82	.73	.65	.57	.49	.41
240	1.44	1.34	1.25	1.19	1.14	1.09	1.05	1.00	.95	.91	.82	.73	.65	.57	.49
250	1.55	1.44	1.34	1.29	1.24	1.19	1.14	1.09	1.05	1.00	.91	.82	.73	.65	.57
260	1.66	1.55	1.44	1.39	1.34	1.29	1.24	1.19	1.14	1.09	1.00	.91	.82	.73	.65
270	1.76	1.66	1.55	1.50	1.44	1.39	1.34	1.29	1.24	1.19	1.09	1.00	.91	.82	.73
280	1.87	1.76	1.66	1.60	1.55	1.50	1.44	1.39	1.34	1.29	1.19	1.09	1.00	.91	.82
290	1.99	1.87	1.76	1.71	1.66	1.60	1.55	1.50	1.44	1.39	1.29	1.19	1.09	1.00	.91
300	2.10	1.99	1.87	1.82	1.76	1.71	1.66	1.60	1.55	1.50	1.39	1.29	1.19	1.09	1.00

CORRECTION FACTORS FOR STEAM PRESSURES AND AIR TEMPERATURES OTHER THAN STANDARD

STEAM PRESSURE		ENTERING AIR TEMPERATURE °F														
GAUGE	ABS. PSI	TEMP. °F	45	55	STD 65	70	75	80	85	90	100	110	120	130	140	150
(VAC) 15" HG	7.32	178.9	0.90	0.80	0.70	0.65	0.60	0.56	0.51	0.45	0.39	0.32	0.25	0.18	0.13	0.08
(VAC) 10"	9.78	192.2	1.02	0.91	0.81	0.76	0.71	0.66	0.62	0.55	0.48	0.40	0.33	0.26	0.20	0.14
(VAC) 5"	12.25	202.9	1.11	1.00	0.90	0.85	0.79	0.75	0.70	0.63	0.56	0.48	0.40	0.33	0.27	0.20
0 PSI	14.696	212.0	1.19	1.09	0.97	0.92	0.87	0.82	0.77	0.70	0.63	0.54	0.46	0.38	0.31	0.25
▶ .899	15.595	215.0	1.22	1.11	1.00	0.95	0.90	0.84	0.80	0.75	0.65	0.57	0.48	0.40	0.33	0.26
5	19.70	227.1	1.34	1.22	1.11	1.05	1.00	0.95	0.90	0.81	0.75	0.66	0.57	0.49	0.41	0.34
10	24.70	239.4	1.45	1.33	1.22	1.17	1.11	1.05	1.00	0.91	0.85	0.75	0.66	0.58	0.50	0.42
15	29.70	249.8	1.55	1.43	1.31	1.26	1.20	1.14	1.09	1.00	0.94	0.84	0.75	0.66	0.57	0.49
20	34.70	258.5	1.63	1.52	1.40	1.33	1.28	1.23	1.17	1.07	1.02	0.92	0.82	0.73	0.64	0.55
25	39.70	266.8	1.71	1.59	1.47	1.41	1.36	1.30	1.25	1.15	1.09	0.98	0.89	0.80	0.71	0.62
30	44.70	274.0	1.78	1.66	1.54	1.48	1.42	1.37	1.31	1.21	1.15	1.05	0.95	0.85	0.76	0.68
40	54.70	286.7	1.91	1.79	1.66	1.61	1.54	1.49	1.43	1.32	1.27	1.16	1.06	0.97	0.87	0.78
50	64.70	297.7	2.02	1.90	1.77	1.71	1.65	1.60	1.54	1.42	1.37	1.26	1.16	1.06	0.96	0.87
60	74.70	307.3	2.10	2.00	1.87	1.81	1.75	1.69	1.63	1.51	1.47	1.35	1.25	1.15	1.05	0.95
70	84.70	316.0	2.20	2.09	1.95	1.89	1.83	1.77	1.71	1.59	1.55	1.44	1.33	1.23	1.12	1.03
80	94.70	323.9	2.27	2.17	2.03	1.97	1.91	1.85	1.80	1.69	1.63	1.52	1.41	1.31	1.20	1.10
90	104.70	331.2	2.36	2.24	2.11	2.05	1.98	1.93	1.87	1.74	1.70	1.59	1.48	1.38	1.28	1.17
100	114.70	337.9	2.43	2.31	2.18	2.11	2.05	2.00	1.94	1.81	1.77	1.65	1.54	1.44	1.33	1.23
125	139.70	352.9	2.59	2.47	2.33	2.27	2.21	2.16	2.10	1.96	1.92	1.80	1.69	1.59	1.48	1.38
150	164.70	365.9	2.73	2.62	2.47	2.43	2.35	2.29	2.23	2.08	2.05	1.94	1.82	1.72	1.61	1.51
175	189.70	377.4	2.86	2.74	2.60	2.54	2.47	2.41	2.35	2.21	2.17	2.05	1.95	1.85	1.73	1.63
200	214.70	387.8	2.95	2.85	2.71	2.63	2.58	2.52	2.47	2.31	2.29	2.17	2.06	1.96	1.84	1.75

From Keenan and Keyes — Linear Interpolation. NOTE: Gauge pressure should be corrected for altitude.

Rate of pitch for steam ½"drop over 20-foot run.

Design Data

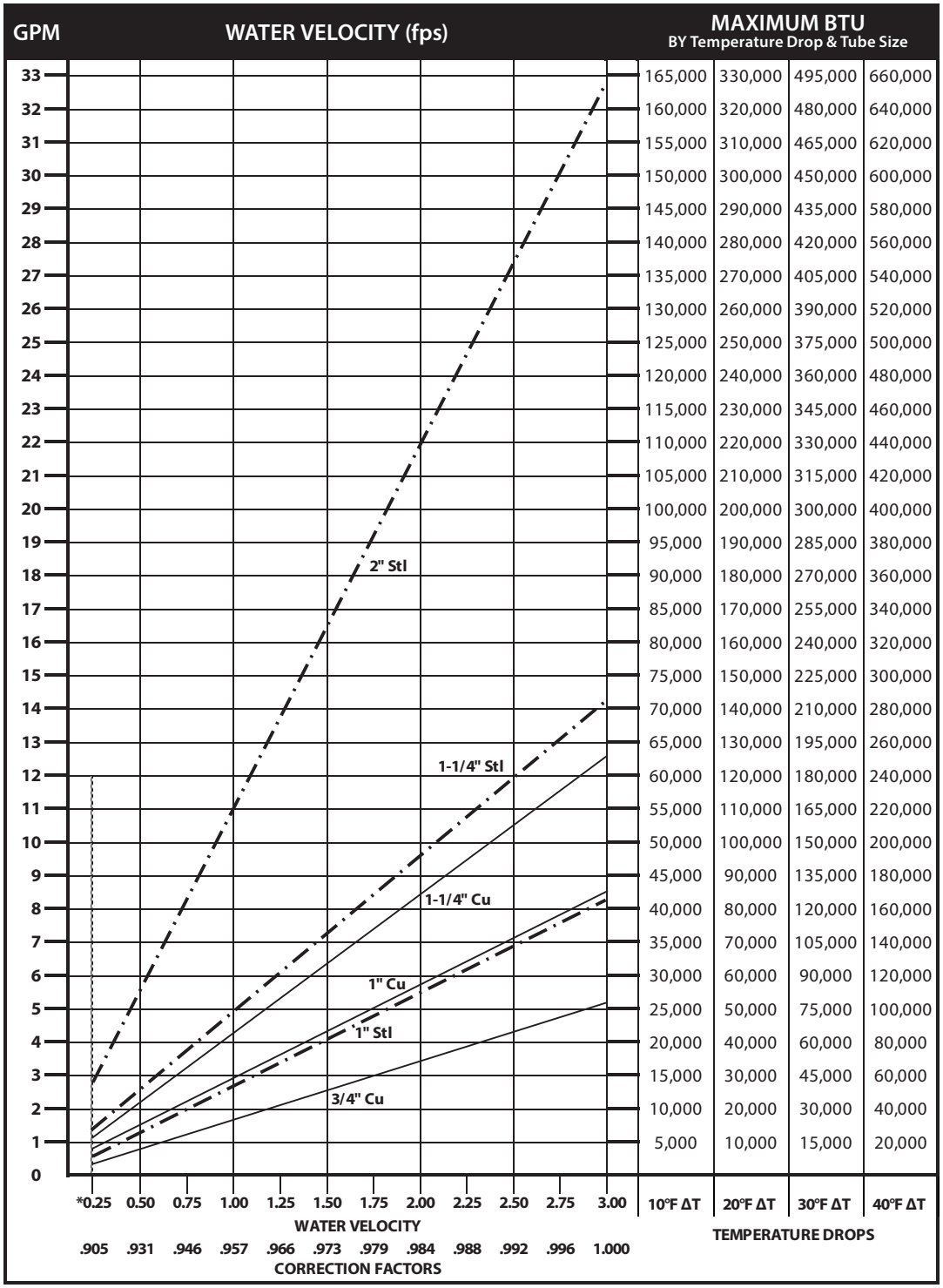

*Do not design below .25 fps.

DYNAMIC FORMULAS

BTU = GPM x 500 x TD

$$GPM = \left(\frac{BTU}{500}\right) \div TD$$

$$TD = \left(\frac{BTU}{500}\right) \div GPM$$

Pressure Drop at Given Water Velocities (Feet of Water per 100 ft. of pipe) based on Hazen - Williams calculation

Nominal Pipe Size	Water Velocity (ft/sec)											
	0.25	0.50	0.75	1.00	1.25	1.50	1.75	2.00	2.25	2.50	2.75	3.00
3/4" Copper	0.06	0.20	0.42	0.72	1.09	1.53	2.04	2.61	3.25	3.95	4.71	5.53
1" Copper	0.04	0.15	0.32	0.54	0.81	1.14	1.52	1.94	2.42	2.94	3.50	4.11
1 1/4" Copper	0.03	0.12	0.25	0.43	0.64	0.90	1.20	1.54	1.92	2.33	2.78	3.26
1" Steel	0.04	0.15	0.32	0.54	0.81	1.14	1.52	1.95	2.42	2.94	3.51	4.12
1 1/4" Steel	0.03	0.11	0.23	0.40	0.60	0.84	1.12	1.44	1.79	2.17	2.59	3.05
2" Steel	0.02	0.07	0.14	0.25	0.37	0.52	0.69	0.89	1.10	1.34	1.60	1.88

Design Data

GUARANTEED WORKING PRESSURES

1" IPS — 780 at Temperatures up to 650˚F.
1-1/4" IPS — 660 at Temperatures up to 650˚F.
2" IPS — 405 at Temperatures up to 650˚F.
1-1/4" CU — 194 at Temperatures up to 300˚F.
1" CU 204 at Temperatures up to 300˚F.
3/4" CU 218 PSI at Temperatures up to 300˚F.

MAXIMUM PRESSURES AT OTHER TEMPERATURES ARE AVAILABLE UPON REQUEST.

Pipe Water Capacities and Quantities Circulated at Velocity of 3 Feet Per Second

Nominal Pipe Size	Pipe I.D. (inches)	Gals Per Lin. Ft.	GPM @ 3' per sec Velocity
3/4" Copper	0.835	0.028	5.12
1" Copper	1.077	0.047	8.52
1 1/4" Copper	1.315	0.071	12.70
1" Steel	1.075	0.047	8.49
1 1/4" Steel	1.395	0.079	14.29
2" Steel	2.115	0.183	32.85

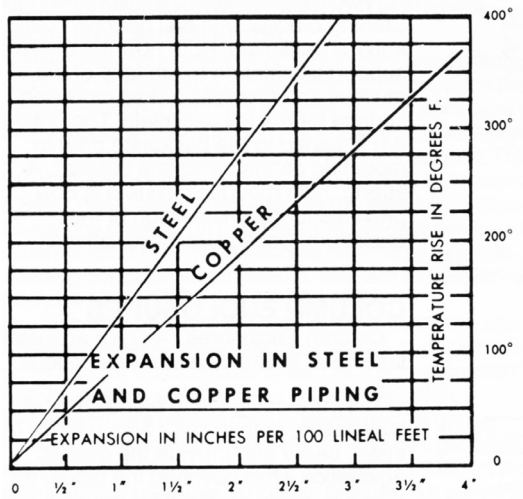

Glycol Correction Factors

Fluid Temperature 200°F

% Solution	Ethylene Glycol	Propylene Glycol
20	.952	.988
30	.921	.968
40	.888	.943
50	.852	.912

Fluid Temperature 180°F

% Solution	Ethylene Glycol	Propylene Glycol
20	.946	.982
30	.913	.961
40	.879	.934
50	.842	.902

Fluid Temperature 140°F

% Solution	Ethylene Glycol	Propylene Glycol
20	.934	.97
30	.898	.946
40	.861	.916
50	.821	.881

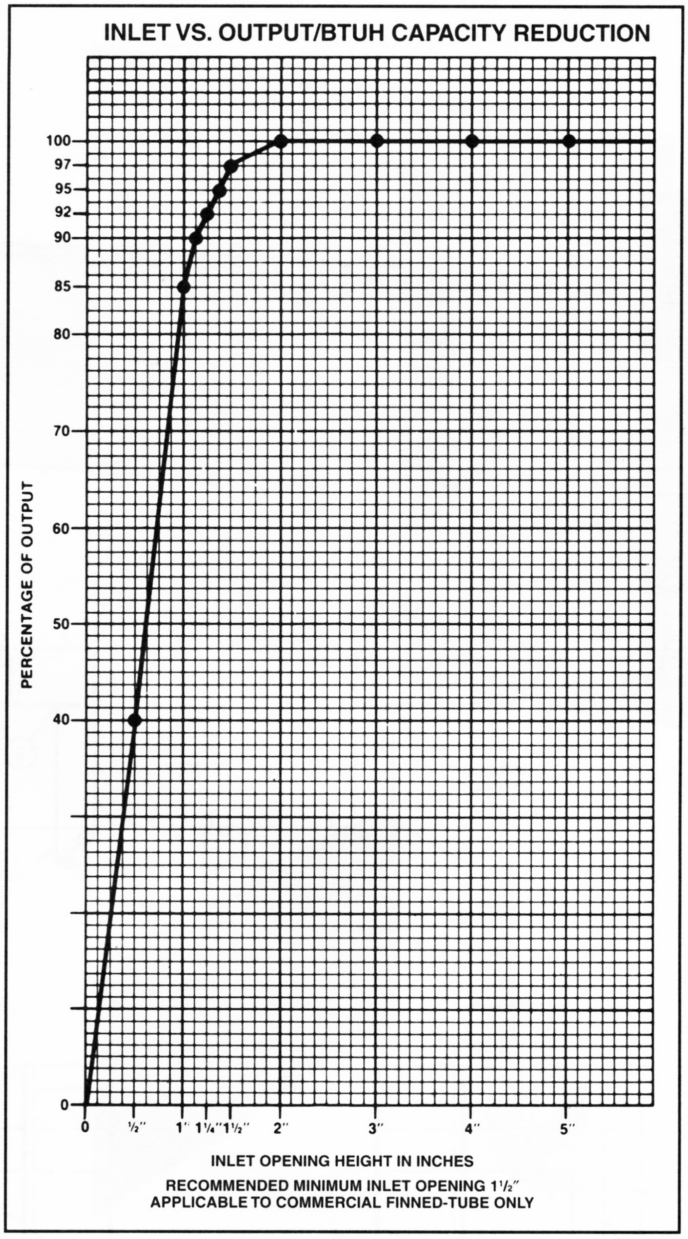

ALTITUDE FACTORS

Approximate factors for convective heat value at varying altitudes

Altitude	Ferrous Units	Copper Alum. Units
Sea Level	1.000	1,000
1,000 ft.	.984	.969
2,000 ft.	.968	.938
3,000 ft.	.952	.908
4,000 ft.	.936	.878
5,000 ft.	.920	.850
6,000 ft.	.904	.822
7,000 ft.	.889	.795
8,000 ft.	.874	.768
9,000 ft.	.859	.743
10,000 ft.	.844	.718
15,000 ft.	.771	.603
20,000 ft.	.703	.502